CODE	DESCRIPTION	POS.	GR.
281639A125	CONDENSE TANK	1	
281199B	FLOATING	2	G0001B
281448B72	FLOATING HOLDER	2	G0001B
273098A	ADHESIVE LABEL	3	G0301A
281485B124	FRONT PANEL	3	G0301A
271944A	FRONT AIR FILTER	4	
281229C72	DRAIN PAN	5	
242364A54	HANDLE	6	
281344A72	MICROSWITCH HOLDER	7	G0298A
281483A72	BUTTON	7	G0298A
275930A	EF83161.3 MICROSWITCH	8	
213327A	ANGLE FRAME	9	
281939A72	CONTROL PANEL COVER	10	
255747A	CONTROL PANEL CABLE	11	
275010A	ELECTRONIC BOARD	12	
281940A124	CONTROL PANEL	13	
281997A	BRAND PLATE	14	
243962A	VIBRATION-DAMPING SPACER	16	G0304A
281509A	VIBRATION-DAMPING COMPRESSOR	16	G0304A
272185A	COIL INSULATION	17	
276145A	EF83161.3 MICROSWITCH	18	
144700A2	WASHER NUT	19	
255766A	MAIN CABLE	20	
276571A	82AV-2010-230-31/2 AXIAL FAN	21	
256447A	CONDENSER	22	
281484A124	FRONT PANEL	23	
242343A	SPRING	24	G0007A
242346A	COMPRESSOR KLIXON SPRING	24	G0007A
276147A	GP14PB CUBIGEL COMPRESSOR	24	G0007A
276569A	CUBIGEL COMPR. RELAY	24	G0007A
277575A	COMPRESSOR COVER	24	G0007A
277576A	COMPRESSOR PLASTIC COVER	24	G0007A
276567A	MRP000AMK.3105 CUBIGEL COMPR.KLIXON	25	G0007A
254493A	CAPILLARY ASS'Y	26	
276051A	TERMINAL BOARD	27	
255605A70	POWER CABLE	28	
315123A	BASE	29	
256507A	BACK EVAPORATOR	30	
279304A	WHEEL	31	
256508A	FRONT EVAPORATOR	32	
219010A	COVER	33	
281937A72	EVAPORATOR COMB	34	
281938A72	COMB SUPPORT	35	

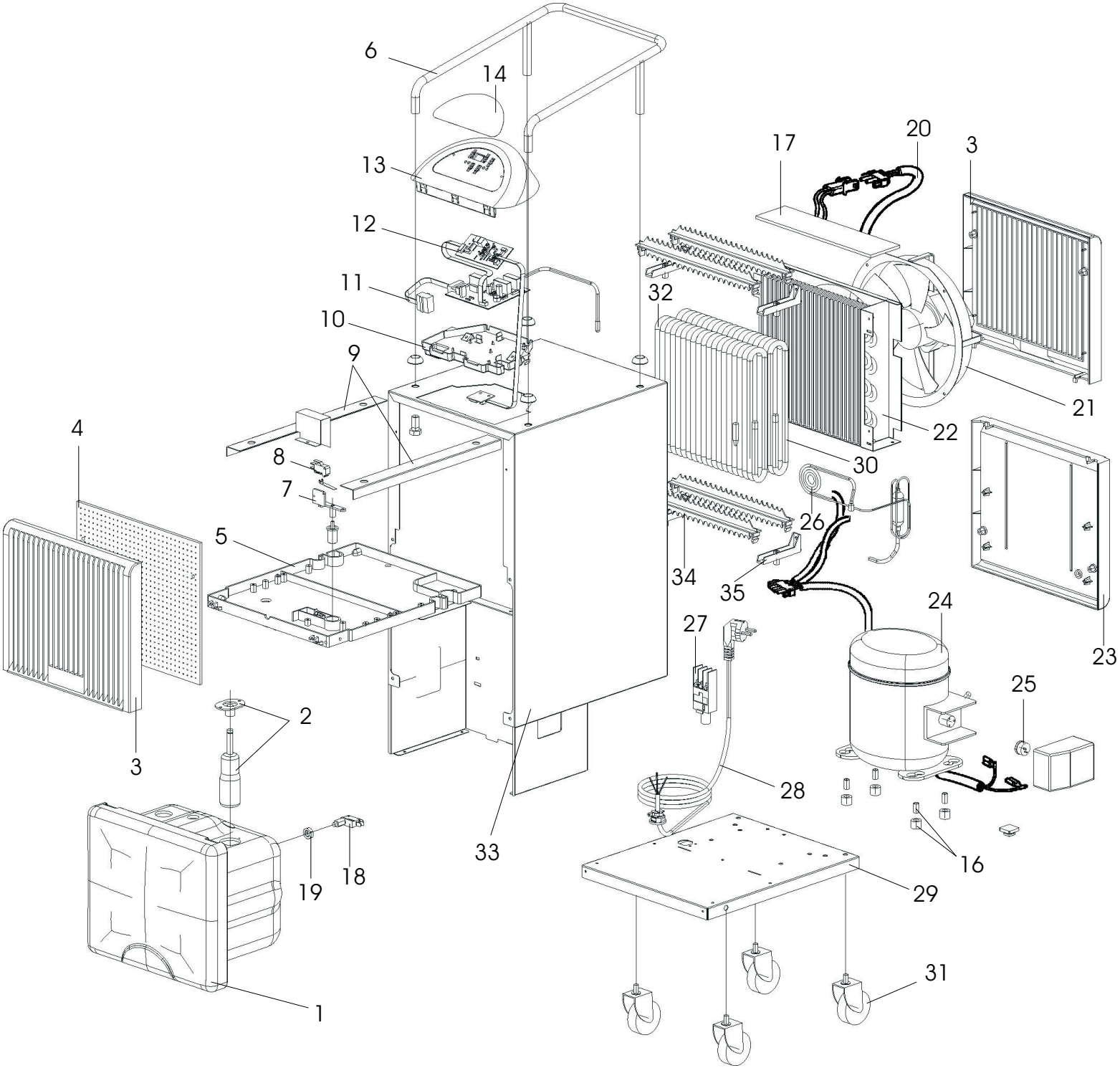

OLIMPIA SPLENDID Via G. Rossa 1-3 Gualtieri (R.E.)

SECCOPROF

Agg. Luglio 2005 - RIF: 069,00